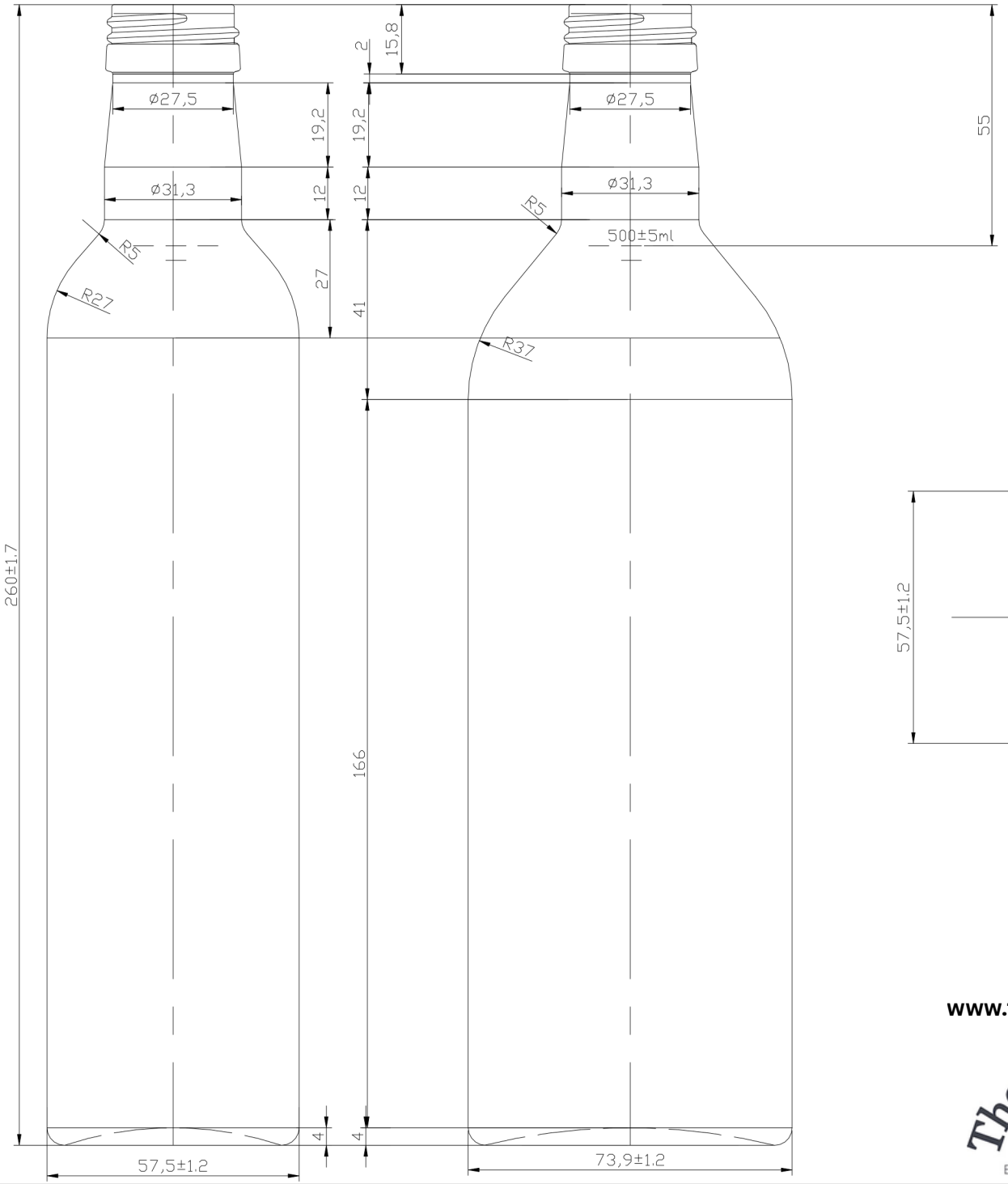

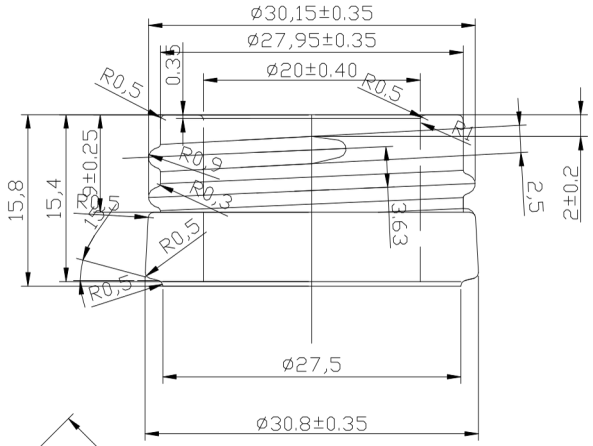

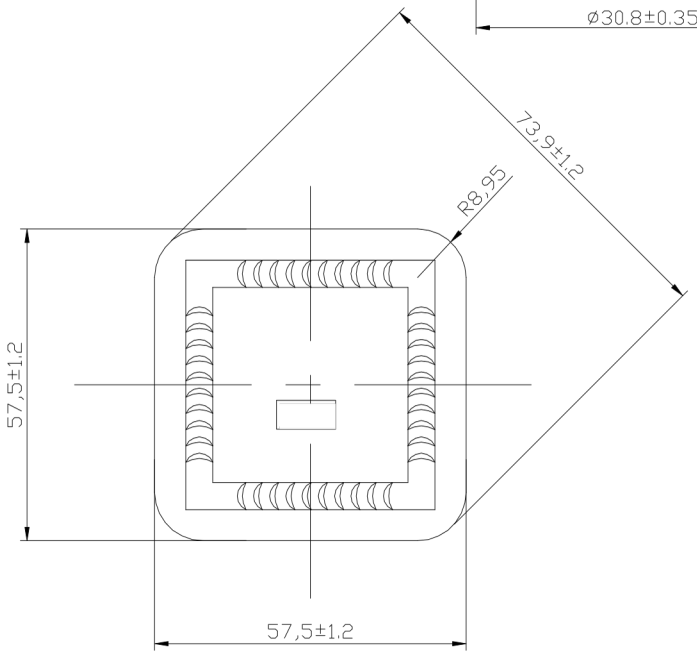

Code: NAREBA-0.5L

www.theolivecentre.com/

The Olive Centre
EQUIPMENT | MACHINERY | ADVICE

Capacity	Full Capacity	Bottle Weight		NO.
500ml	520± 5ml	390±20g		W0079

500ml-B marasca